37 535 SH0 **SKATE COSMOPOLITAN S FLUSH PLATE**

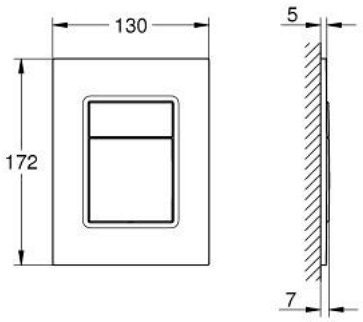

PRODUCT DESCRIPTION

- Colour: alpine white
- for dual flush
- for pneumatic discharge valve AV1
- GD 2 cistern
- vertical and horizontal installation
- 130 x 172 mm
- material: ABS
- GROHE LongLife finish
- GROHE EcoJoy - less water, perfect flow
- flush plate with magnetic holder and fixing brackets included
- compatible with Rapid SLX
- for use with Rapid SL and Uniset with GD 2 cistern please order shaft 40 911 000
- for use with Rapid SL and Uniset 0.82 m installation height please order shaft 40 950 000 (sold separately)