34 726 000 **GROHTHERM PERFECT SHOWER SET WITH TEMPESTA 210**

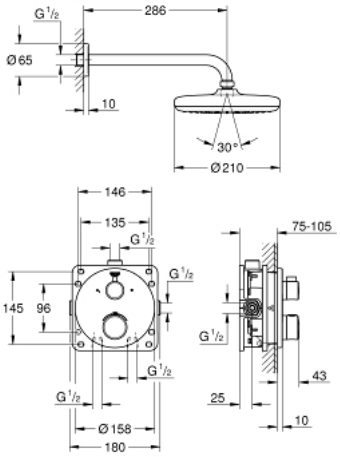

PRODUCT DESCRIPTION

- Colour: chrome
- Grohtherm set for final installation with Aquadimmer (24 076)
- GROHE Rapido SmartBox (35 600/35 604)
- head shower Tempesta 210 9.5 l/min (26 410)
- Shower arm Rainshower 286 mm (28 576)