10 533 524 30 **GROHE CUBEO CONCEALED SHOWER SYSTEM WITH TEMPESTA 110**

PRODUCT DESCRIPTION

- Colour: matte black
- consisting of:
- trim set for GROHE Rapido SmartBox (35 604)
- concealed single-lever shower mixer (101 777)
- Tempesta Cube 110 shower rail set (26 748)
- shower outlet elbow
- without roughing-in set 35 600/35 604 (please order separately)

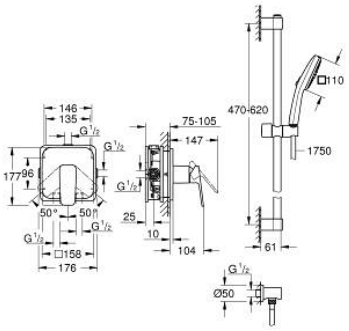

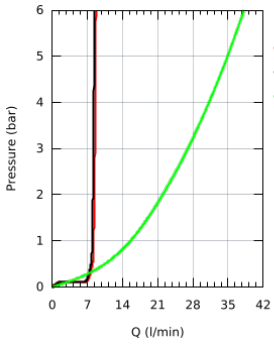

bar	1	2	3	4	5	6
	8.1	8.4	8.5	8.6	8.6	8.7
	7.8	8.1	8.2	8.3	8.3	8.4
l/min	15.6	22.0	27.0	31.2	34.9	38.2