10 533 500 00 **GROHE CUBEO CONCEALED SHOWER SYSTEM WITH TEMPESTA 110**

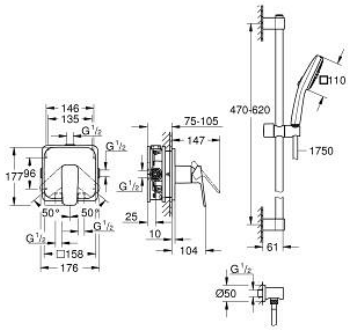

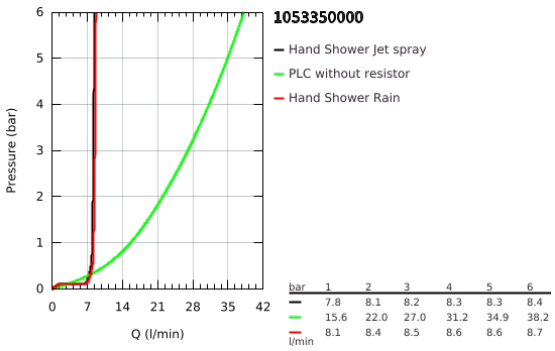

PRODUCT DESCRIPTION

- Colour: chrome
- consisting of:
- trim set for GROHE Rapido SmartBox (35 604)
- concealed single-lever shower mixer (101 777)
- Tempesta Cube 110 shower rail set (26 748)
- shower outlet elbow (27 057)
- without roughing-in set 35 600/35 604 (please order separately)