10 533 400 00 **GROHE CUBEO CONCEALED SHOWER SYSTEM WITH TEMPESTA 250**

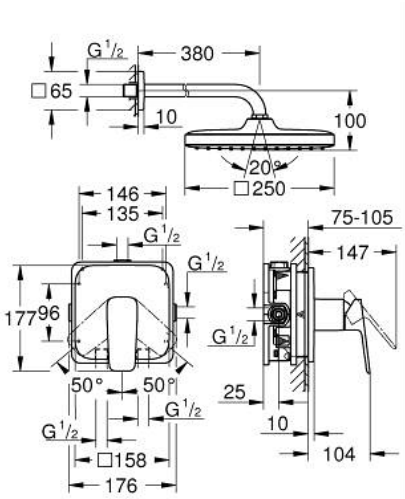

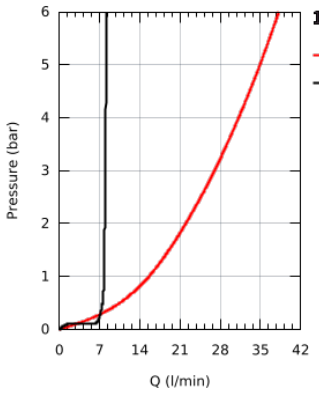

bar	1	2	3	4	5	6
—	15.6	22.0	27.0	31.2	34.9	38.2
—	7.6	7.9	8.0	8.1	8.1	8.2
l/min						

PRODUCT DESCRIPTION

- Colour: chrome
- consisting of:
- trim set for GROHE Rapido SmartBox (35 604)
- concealed single-lever shower mixer (101 777)
- Tempesta 250 Cube head shower set 9.5 l/min (26 687) including horizontal shower arm 380 mm
- without roughing-in set 35 600/35 604 (please order separately)